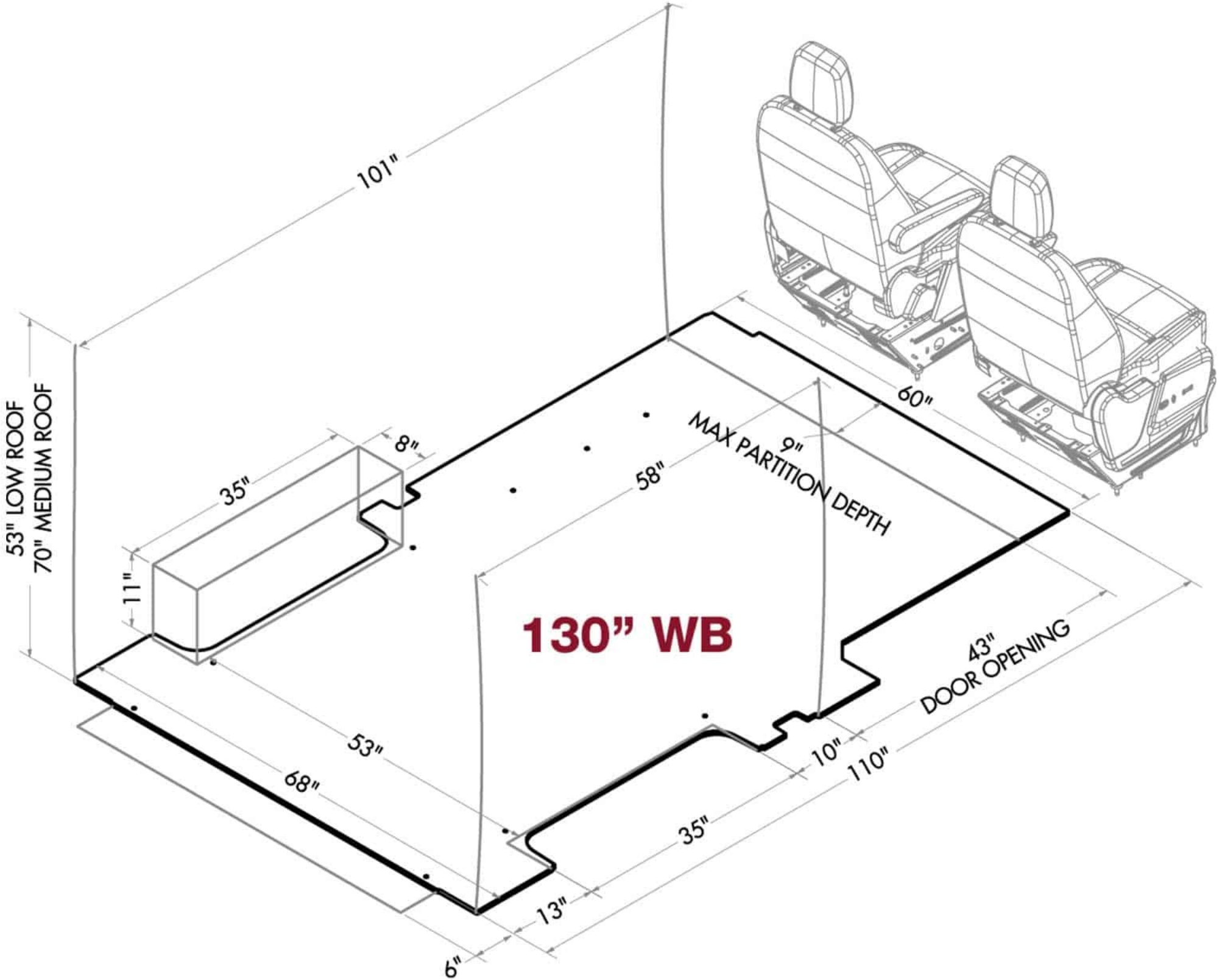
101"
53" LOW ROOF
70" MEDIUM ROOF
8"
35"
11"
58"
9"
MAX PARTITION DEPTH
60"
130" WB
43"
DOOR OPENING
53"
68"
10"
110"
35"
13"
6"