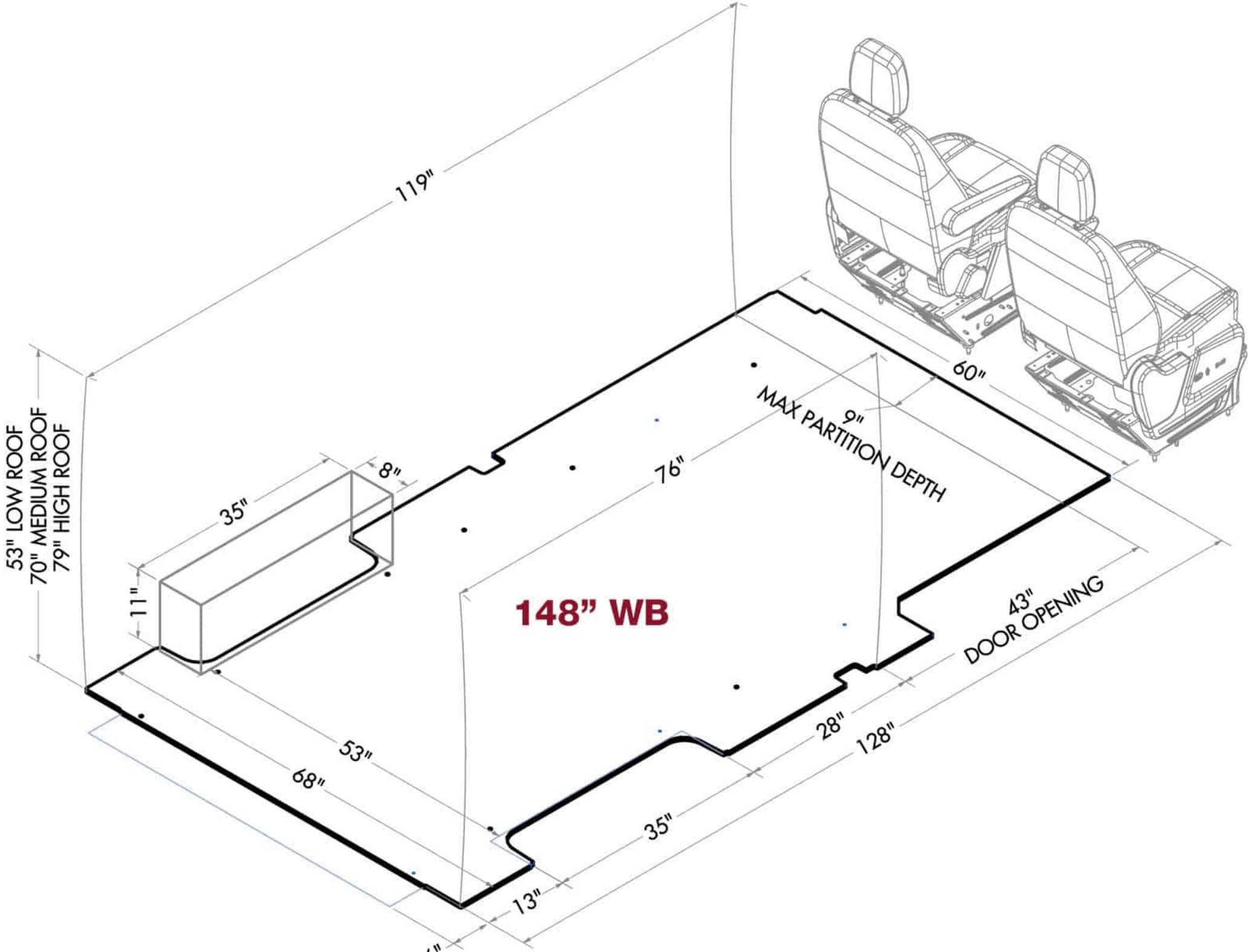
119"
53" LOW ROOF
70" MEDIUM ROOF
79" HIGH ROOF
35"
8"
11"
76"
9"
MAX PARTITION DEPTH
60"
148" WB
43"
DOOR OPENING
28"
128"
53"
68"
35"
13"