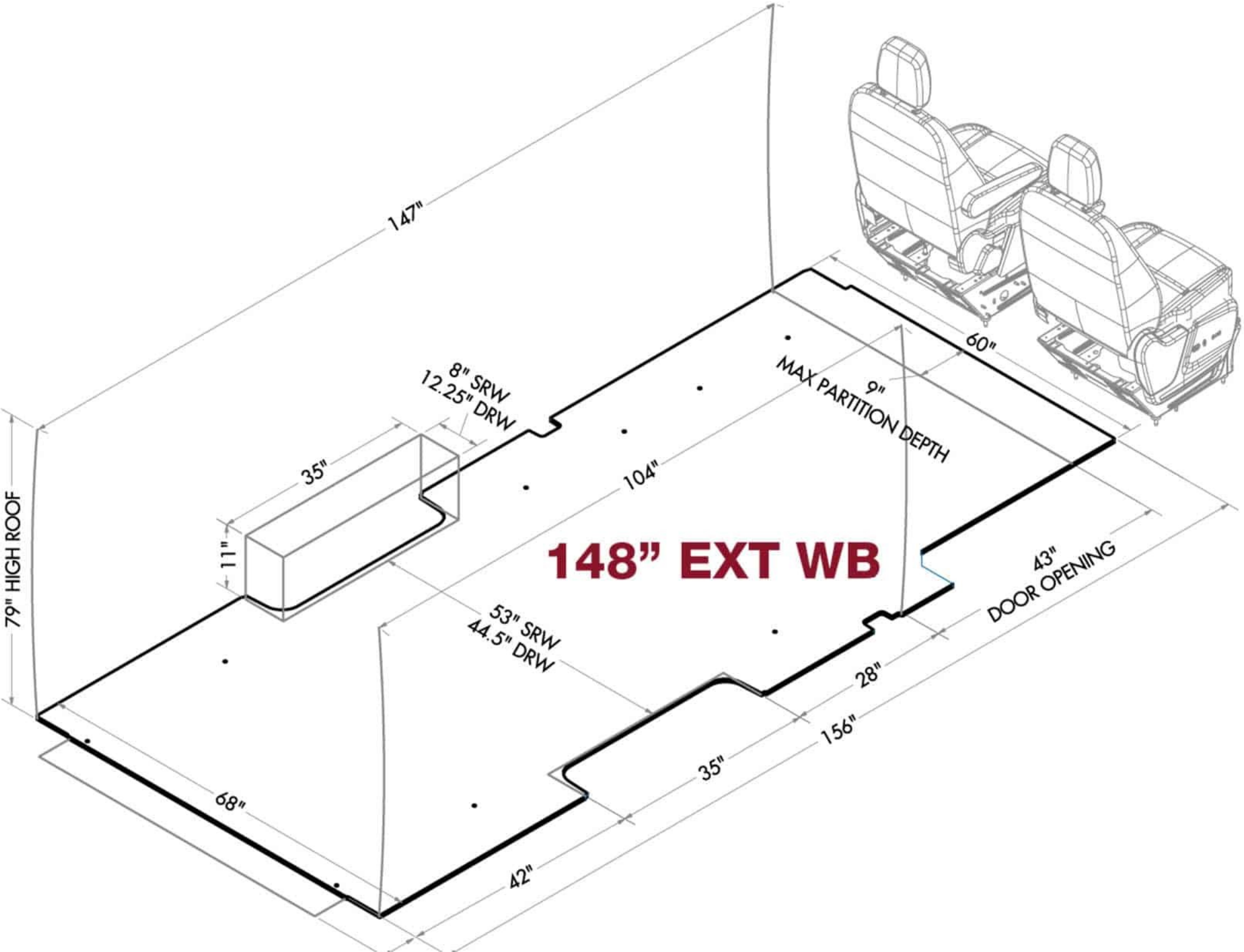
147"
8" SRW
12.25" DRW
35"
11"
79" HIGH ROOF
104"
9"
MAX PARTITION DEPTH
60"
148" EXT WB
43"
DOOR OPENING
53" SRW
44.5" DRW
28"
156"
35"
68"
42"