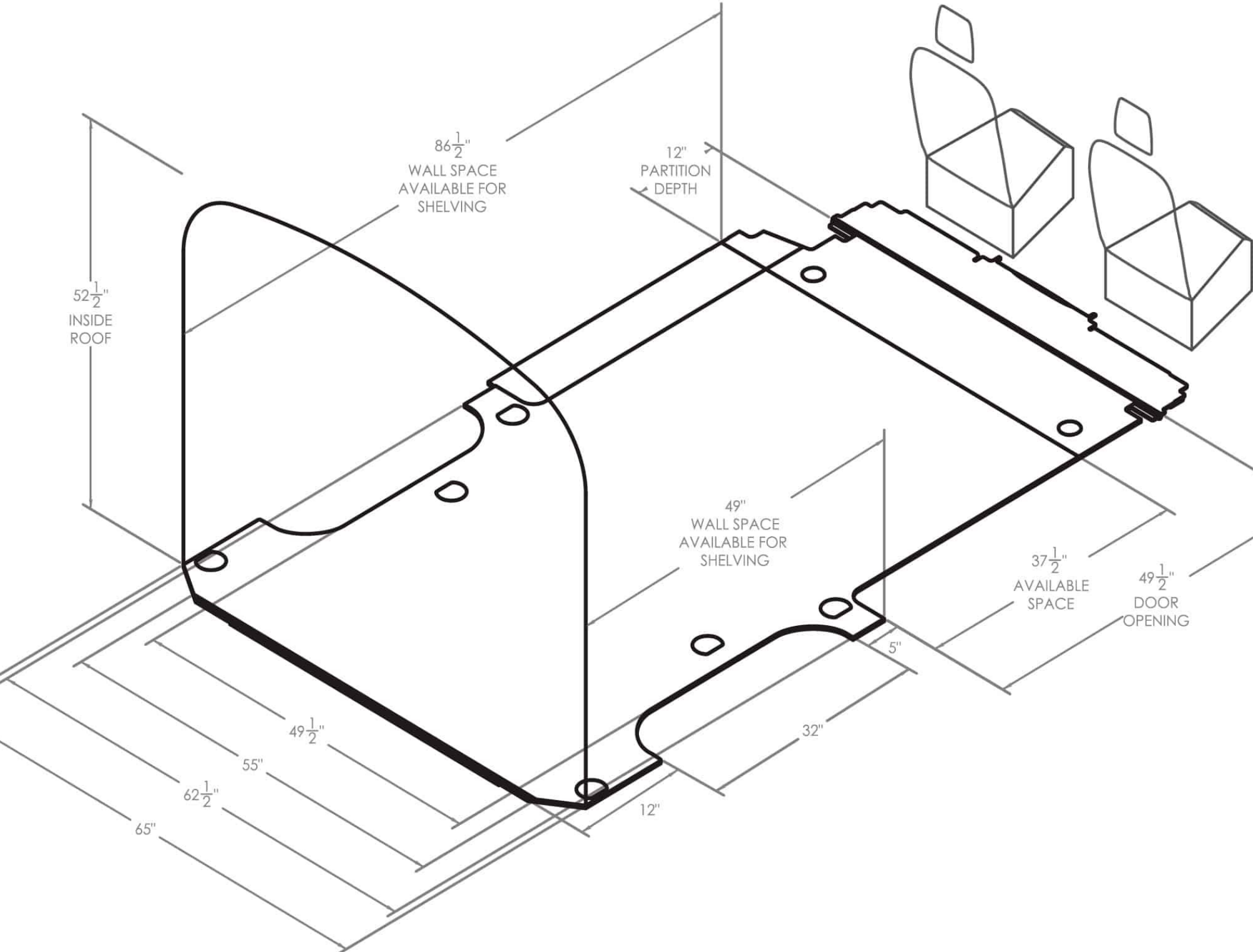
86 1/2"
WALL SPACE
AVAILABLE FOR
SHELVING
12"
PARTITION
DEPTH
52 1/2"
INSIDE
ROOF
49"
WALL SPACE
AVAILABLE FOR
SHELVING
37 1/2"
AVAILABLE
SPACE
49 1/2"
DOOR
OPENING
5"
32"
12"
49 1/2"
55"
62 1/2"
65"