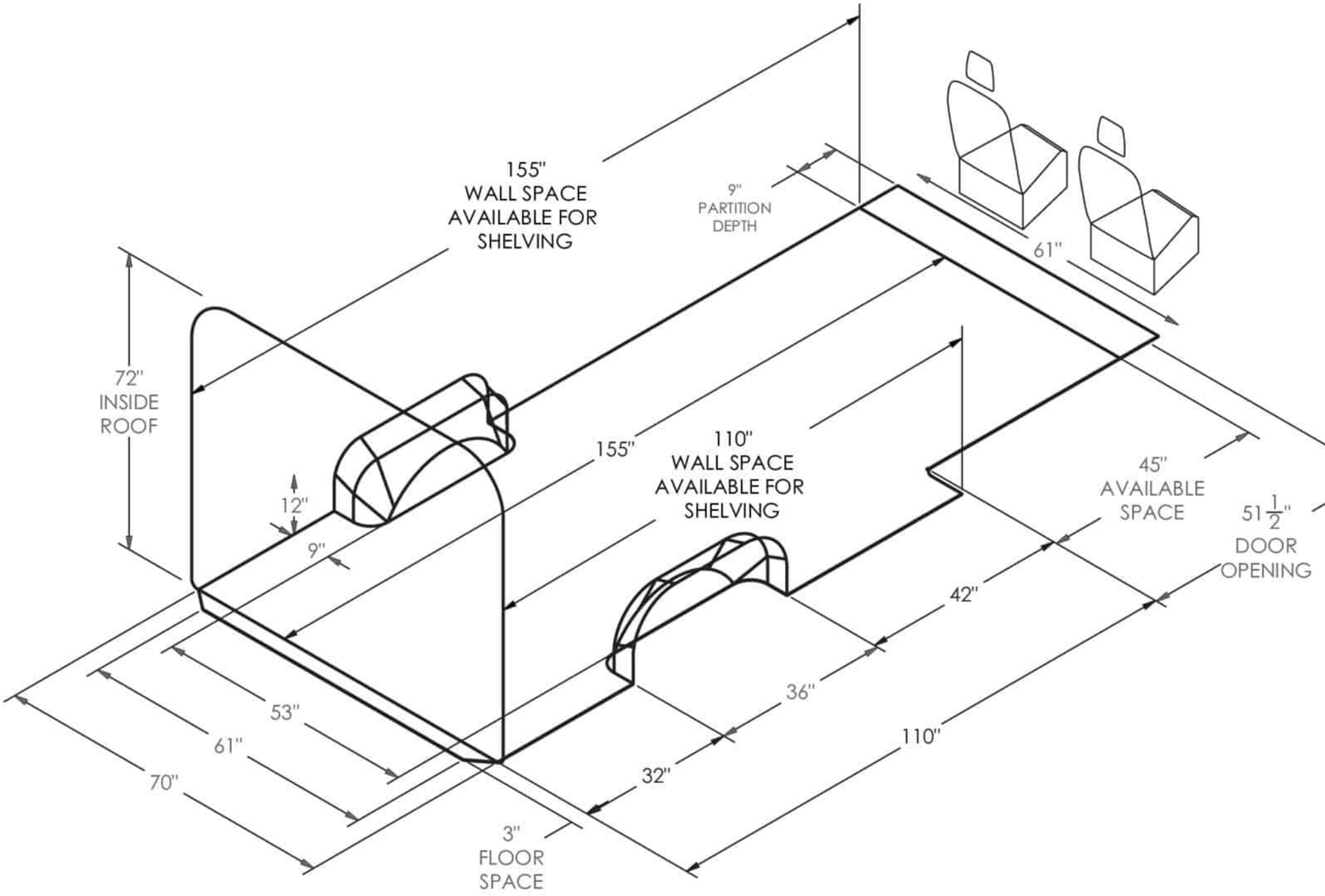
155"
WALL SPACE
AVAILABLE FOR
SHELVING
9"
PARTITION
DEPTH
61"
72"
INSIDE
ROOF
155"
110"
WALL SPACE
AVAILABLE FOR
SHELVING
45"
AVAILABLE
SPACE
51 1/2"
DOOR
OPENING
12"
9"
42"
36"
110"
32"
53"
61"
70"
3"
FLOOR
SPACE