# Express & Savana

## Upfit Guide



**NOW FEATURING**

Packd Products

**WORK VEHICLES THAT WORK BETTER!**

advantage OUTFITTERS

# Introduction

## What's the Advantage?



### We make it Easy

- Simplified layout and design process
- Technical support and configuration assistance

### We make it Fast

- Everything in this catalog is in stock
- Installs within 48 hours or less

### We make it Last

- Certified and trained Installers
- Lifetime Installation Warranty

Advantage Outfitters is a commercial vehicle upfitter, specializing in storage equipment and accessories for cargo vans. With 20+ years of experience, we have earned the trust of contractors, trade fleets, utilities, municipalities, vehicle dealers, and leasing companies. We are defined by our strong team spirit and our passion for making work vehicles work better.






sales@advantageoutfitters.com

866.925.4844
advantageoutfitters.com





## A simple 6 step process to an efficient work van

01. Start with **Interior Finishing**
02. Add a **Safety Partition**
03. Choose your **Shelving Package**
04. Add time-saving **Interior Accessories**
05. Select your **Roof Equipment**
06. Finish with **Exterior Accessories**

## Contents


| | |
|---|---|
| **Interior Finishing** | **04 - 07** |
| Wall Liners | 04 |
| Flooring | 05 |
| Logistic Equipment | 06 |
| Interior Lighting | 07 |
| **Safety Partitions** | **08 - 09** |
| Straight Partitions | 08 |
| Contoured Partitions | 09 |
| **Shelving Packages** | **12 - 17** |
| Base | 12 |
| General Service | 13 |
| HVAC | 14 |
| Plumbing | 15 |
| Electrical | 16 |
| Delivery | 17 |
| **Interior Accessories** | **19-25** |
| Side-Door Drawer Systems | 19 |
| Parts Keepers | 20-21 |
| Drawer Cabinets | 22 |
| Shelving Accessories | 23 |
| Cab Accessories | 24 |
| Bottle Holders | 25 |
| **Roof Equipment** | **26 - 29** |
| Side Dropdown | 26 |
| Clamp-down Racks | 27 |
| Cargo Racks | 28 |
| Ladder Rack Accessories | 29 |
| **Exterior Accessories** | **30 - 31** |
| Running Boards / Hitches | 30 |
| Security | 31 |
| **Specialty Equipment** | **32-35** |
| Climate Control | 32 |
| Inverters | 33 |
| Liftgates | 34 |
| **Vehicle Layouts** | **35** |

# Wall Liners

## vanLiner Wall and Door Protection

- Protect your vehicle investment
- 3/16” gray plastic
- Highly durable & impact resistant





| Model | Wall Panels Part# | Door Panels Part# |
|---|---|---|
| Regular 135” WB with hinged side doors | 601G1WL | 601GXDPB |
| Regular 135” WB with sliding side door | 601G1WL | 601GXDP |

| Model | Wall Panels Part# | Door Panels Part# |
|---|---|---|
| Extended 155” WB with hinged side doors | 601G2WL | 601GXDPB |
| Extended 155” WB with sliding side door | 601G2WL | 601GXDP |

## Duratherm Insulated Kits

- 5/16” Heavy-duty rigid gray plastic door protection including a layer of foil/foam insulation attached to the back of the panels
- Provides sound deadening and an R4 equivalent thermal barrier





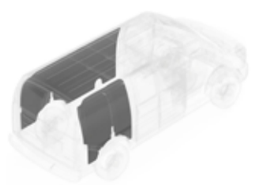

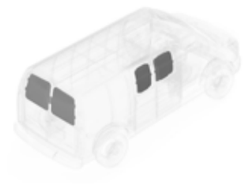



Insulation kits also available, call for details

| Model | Wall Liners Part# | Door Liners Part# | Ceiling Liners Part# |
|---|---|---|---|
| Regular 135” WB with hinged side doors | 654G1WL | 654GXDPB | 654G1CL |
| Regular 135” WB with sliding side door | 654G1WL | 654GXDP | 654G1CL |
| Extended 155” WB with hinged side doors | 654G2WL | 654GXDPB | 654G2CL |
| Extended 155” WB with sliding side door | 654G2WL | 654GXDP | 654G2CL |



# Flooring



## Floor Protection

### Rubber Mat

- 1/4” virgin rubber resists oils and chemicals
- Saves knees and increases traction
- One piece seamless

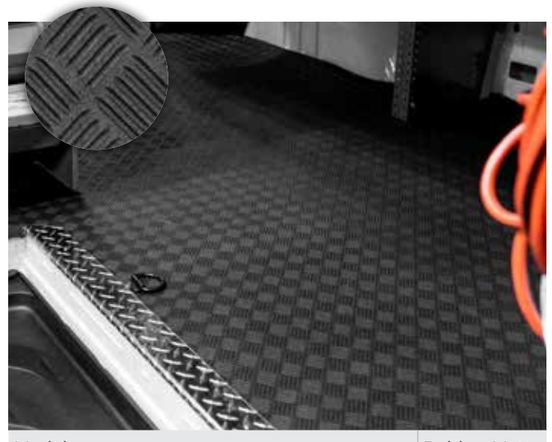

| Model | Rubber Mat Part # |
|---|---|
| Regular 135” WB | 654G1RM |
| Extended 155” WB | 654G2RM |

### StabiliGrip Floor

- 1/2” rubberized plastic with fiberglass reinforcement
- Provides firm base for tools and equipment
- Durable, non-skid surface



| Model | Stabiligrip Part # |
|---|---|
| Regular 135” WB | 654G1SG |
| Extended 155” WB | 654G2SG |

### Door Sills

- Custom fit, heavy-duty diamond plate aluminum sill plates
- Protects entry points and provides traction

| Description | Door Sill Part # |
|---|---|
| Set of 2 for Side & Rear Doors | 654GXRSS |



Side Door Sill



Rear Door Sill

## Our 6 Step Process

| | | |
|---|---|---|
| Start with **Interior Finishing** 01 | Add a **Safety Partition** 02 | Choose your **Shelving Package** 03 |
| Add time-saving **Interior Accessories** 04 | Select your **Roof Equipment** 05 | Finish with **Exterior Accessories** 06 |

# Logistics Equipment

## Aluminum Lashing Rail Kit

- Durable & versatile
- Kit includes 1 level of track for both side walls
- Includes 5 movable tie-down rings
- Rachet straps also available





| Model | Lashing Rail Kit Part # | 8' Ratchet Strap | 6' Cam Buckle Strap |
|---|---|---|---|
| Regular 135" WB | 842G1LK | 842XX8RB | 842XX6CB |
| Extended 155" WB | 842G2LK | 842XX8RB | 842XX6CB |

## Seat Covers

- Custom-fit
- Tough Cordura fabric



| Description | Part# |
|---|---|
| Seat Covers (set of 2) | 876GXSC |

## Window Grills

- Black painted wire mesh construction

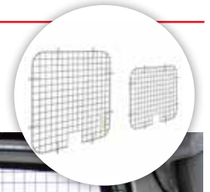







| Description | Part# |
|---|---|
| Rear Doors | 876GXRG |
| Side doors (barn/hinged doors only) | 876GXSGB |





# Lighting



## Strip Lighting

- High intensity 2' LED light
- Mounts to side of ceiling ribs to maintain headroom
- Light is not compatible with ceiling liners
- Wired with OEM (door) switch
- 2 recommended for Regular 135" WB vans
- 3 recommended for Extended 155" WB vans



| Description | Part# |
|---|---|
| Single 2' LED light | 452XXLD2 |

## Motion Sensor Lighting

- Motion sensor activated
- Recommended for install with Duratherm ceilings
- 2 recommended for the regular 135" WB vans
- 3 recommended for the extended 155" WB vans



| Description | Part# |
|---|---|
| 1 LED light kit | 454XXLK1 |
| 2 LED lights kit | 454XXLK2 |
| 3 LED lights kit | 454XXLK3 |
| Bracket and hardware kit | 454XXBH* |






# Straight Partitions

## Partitions Without Door

### Steel

- Heavy gauge white powder-coated steel
- Includes hatch in bottom of center panel for long material
- Mesh upper on center & passenger side panels for increased visibility
- 7” setback for maximum seat travel

### Aluminum

- Lightweight & durable aluminum
- Rattle-free design
- Mesh upper on center panel
- 4” setback for seat travel



Steel Partition



Aluminum Partition

| Description | Part# |
|---|---|
| Steel Partition Without Door | 287GXSP |
| Aluminum Partition Without Door | P40-GMS |

## Partitions With Door

### Steel

- Heavy gauge white powder-coated steel
- Includes hatch in bottom of center panel for long material
- Mesh upper on center & passenger side panels for increased visibility
- 7” setback for maximum seat travel

### Aluminum

- Lightweight & durable aluminum
- Rattle-free design
- Mesh upper on center panel
- 4” setback for seat travel
- Includes hinged latching door for access to cargo area

Steel Partition



Aluminum Partition





| Description | Part# |
|---|---|
| Steel Partition With Door | 287GXHDP |
| Aluminum Partition With Door | P50-GMS |



# Contoured Partitions



## Composite Partitions

- One-piece design
- Innovative design maximizes both driver comfort and storage space
- Perfect fit provides improved climate control and noise reduction
- Available with or without polycarbonate window



Solid Composite



Solid Composite with Window

| Description | Part# |
|---|---|
| Solid Composite Partition | 187GXCP |
| Composite Partition with Window | 187GXCPW |

## Aluminum Partitions

- Lightweight & durable aluminum
- Rattle-free design
- Maximize seatback travel while increasing cargo floor area
- Available with or without window for visibility



Contoured Solid Partition



Contoured Partition with Window

| Description | Part# |
|---|---|
| Contoured Aluminum Partition | P10-GMS |
| Contoured Aluminum Partition with Window | P11-GMS |

# Increase your productivity with our Trade-Specific Packages










## What's the Packd Advantage?

Packd

### Durable



Load tested to **1200 lbs** per shelf

### Secure

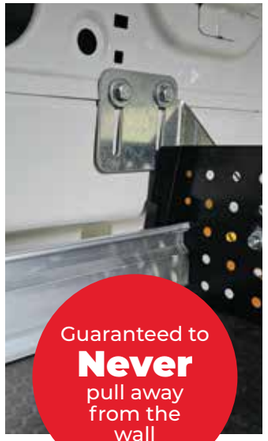

Guaranteed to **Never** pull away from the wall

### Lightweight



Save FUEL and increase **Payload** capactity

### Quiet



Quiet **Rattle-Free** ride

## Here's what our customers say about their upfitted vans

**"My technicians are able to keep the vans organized, which increases our overall efficiency."**

*Mike S.*
*HVAC Service Company.*



**"You really helped us get the maximum benefit out of our vehicles."**

*Michael R.*
*Fire Protection Company.*



## Our 6 Step Process

| | | |
|---|---|---|
| Start with **Interior Finishing** 01 | Add a **Safety Partition** 02 | Choose your **Shelving Package** 03 |
| Add time-saving **Interior Accessories** 04 | Select your **Roof Equipment** 05 | Finish with **Exterior Accessories** 06 |

# Shelving Packages

## Base Package

### Choose your partition

- Straight Partition
- Swing Door Partition
- No Partition

### Driver's side includes:

- (1) Aluminum 3 Shelf Unit, 45"H x 84"L - (Depths:12,14,14)

### Passenger's side includes:

- (1) Aluminum 3 Shelf Unit, 45"H x 48"L - (Depths: 12,14,14)

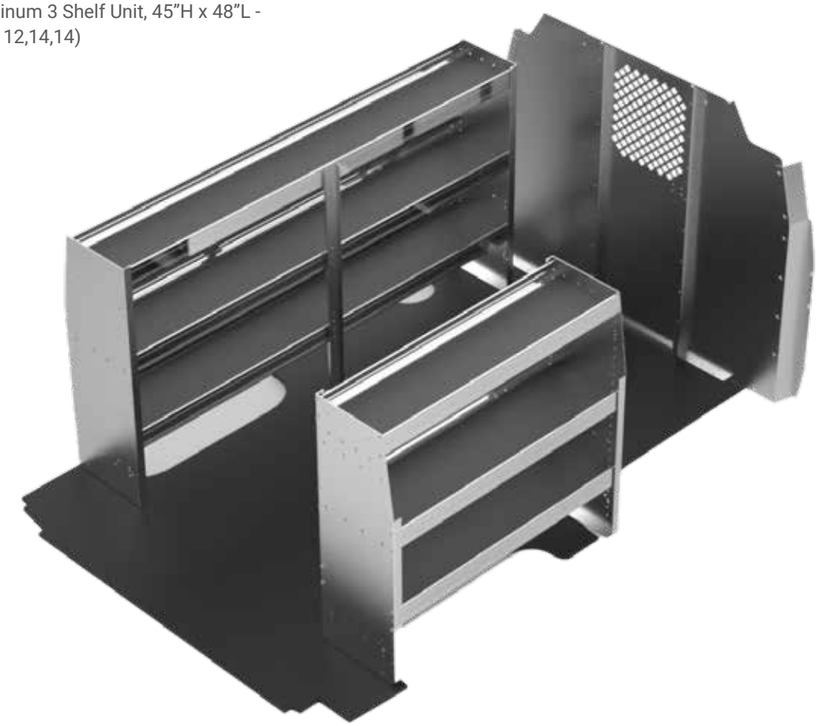

Packd

**NOTE**
96" DS shelving unit is also available.
*Flooring not included in shelving packages.

| Model | Part# |
|---|---|
| Base Package with Straight Partition | 175GXBP |
| Base Package with Swing Door Partition | 175GXBPD |
| Base Package with No Partition | 175GXBPX |

## General Service Package

### Choose your partition

- Straight Partition
- Swing Door Partition
- No Partition

### Driver's side includes:

- (1) Aluminum 3 Shelf Unit, 45"H x 84"L - (Depths:12,14,14)
- (10) adjustable 3" rattle-free dividers
- (2) 18.5"W x 10.5"H 2-drawer cabinets
- (1) fixed hook

### Passenger's side includes:

- (1) Aluminum 3 Shelf Unit, 45"H x 48"L - (Depths: 12,14,14)
- (4) 14"D x 12"W plastic bins
- (1) swivel hook



Packd

**NOTE**
96" DS shelving unit is also available.
*Flooring not included in shelving packages.

| Model | Part# |
|---|---|
| General Service Package with Straight Partition | 175GXGSP |
| General Service Package with Swing Door Partition | 175GXGSPD |
| General Service Package with No Partition | 175GXGSPX |





SHELVING PACKAGES

# Shelving Packages

## HVAC Package

### Choose your partition

- Straight Partition
- Swing Door Partition
- No Partition



### Driver's side includes:

- (1) Aluminum 3 Shelf Unit, 45"H x 84"L - (Depths:12,14,14)
- (7) 14"D x 12"W plastic bins with dividers
- (1) large gas bottle holder
- (1) fixed hook

### Passenger's side includes:

- (1) Aluminum 3 Shelf Unit, 45"H x 48"L - (Depths: 12,14,14)
- (10) adjustable 3" rattle-free dividers
- (1) 43"H x 13.5"W 3-level refrigerant rack
- (1) swivel hook



Packd

**NOTE**
96" DS shelving unit is also available.
*Flooring not included in shelving packages.

| Model | Part# |
|---|---|
| HVAC Package with Straight Partition | 175GXHP |
| HVAC Package with Swing Door Partition | 175GXHPD |
| HVAC Package with No Partition | 175GXHPX |



## Plumbing Package

### Choose your partition

- Straight Partition
- Swing Door Partition
- No Partition

### Driver's side includes:

- (1) Aluminum 3 Shelf Unit, 45"H x 84"L - (Depths:12,14,14)
- (10) adjustable 3" rattle-free dividers
- (1) large gas bottle holder
- (1) fixed hook

### Passenger's side includes:

- (1) Aluminum 3 Shelf Unit, 45"H x 48"L - (Depths: 12,14,14)
- (8) 14"D x 12"W plastic bins with dividers
- (4) 12"D x 12"W plastic bins with dividers
- (1) large gas bottle holder
- (1) swivel hook

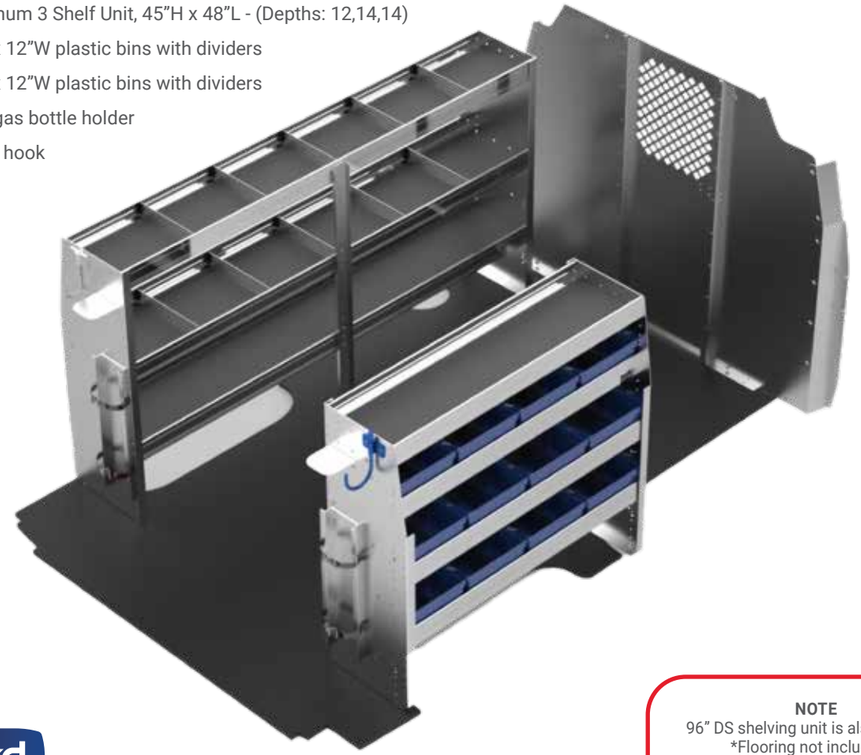

Packd

**NOTE**
96" DS shelving unit is also available.
*Flooring not included in shelving packages.

| Model | Part# |
|---|---|
| Plumbing Package with Straight Partition | 175GXPP |
| Plumbing Package with Swing Door Partition | 175GXPPD |
| Plumbing Package with No Partition | 175GXPPX |

# Shelving Packages

## Electrical Package

### Choose your partition

- Straight Partition
- Swing Door Partition
- No Partition

### Driver's side includes:

- (1) Aluminum 3 Shelf Unit, 45"H x 84"L - (Depths:12,14,14)
- (7) 12"D x 12"W plastic bins with dividers
- (1) 11"H x 48"L locking cabinet
- (1) 11"H x 36"L locking cabinet
- (1) wire reel holder
- (1) fixed hook

### Passenger's side includes:

- (1) Aluminum 3 Shelf Unit, 45"H x 48"L - (Depths: 12,14,14)
- (10) adjustable 3" rattle-free dividers
- (1) swivel hook

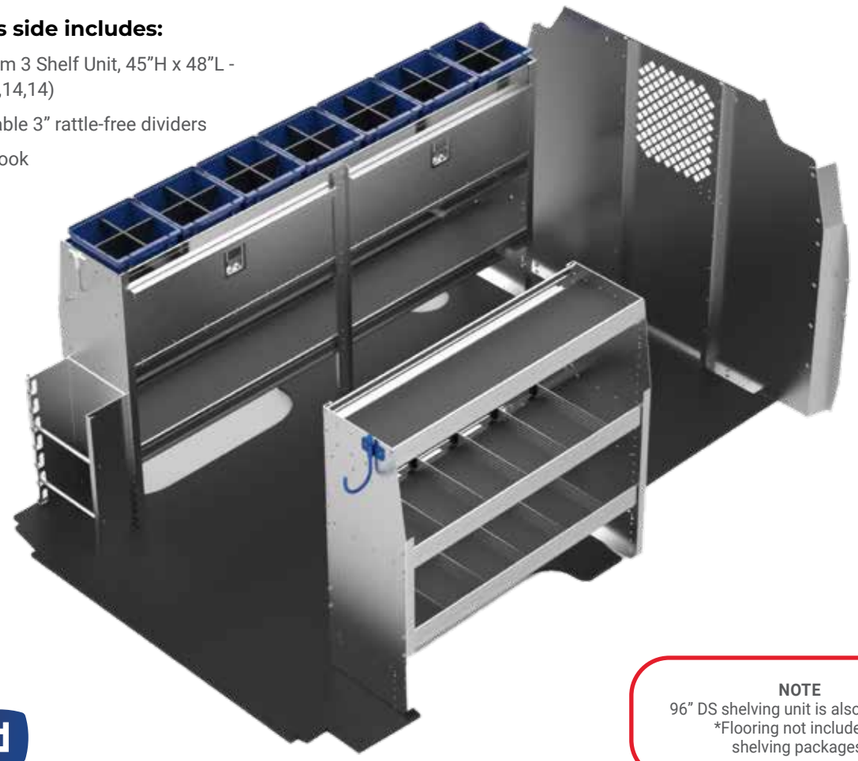

Packd

**NOTE**
96" DS shelving unit is also available.
*Flooring not included in shelving packages.

| Model | Part# |
|---|---|
| Electrical Package with Straight Partition | 175GXEP |
| Electrical Package with Swing Door Partition | 175GXEPD |
| Electrical Package with No Partition | 175GXEPX |

## Delivery Package

### Choose your partition

- Pass-Thru Partition
- Swing Door Partition
- No Partition

### Driver's side includes:

- (1) 48"H x 72"L - 2 shelf unit with folding shelves



### Passenger's side includes:

- (1) 48"H x 48"L - 2 shelf unit with folding shelves

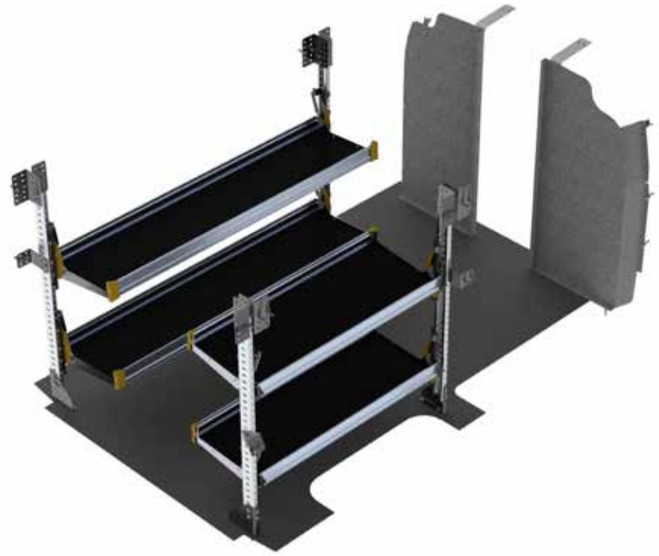

- Folding shelves keep aisle clear when not in use
- Gas shock holds shelf in either up or down position - no latches or rattles
- Capacity is 250 lbs per shelving unit
- Shelves are 18" deep

| Model | Part# |
|---|---|
| Delivery Package with Pass-Thru Partition | 175GXDP |
| Delivery Package with Swing Door Partition | 175GXDPD |
| Delivery Package with No Partition | 175GXBPX |

**DO YOU HAVE A FLEET OF 10+ VANS?**

**Contact us to learn about our fleet upfit solutions**



# Organized Time Saver

Access your most common items without even entering your vehicle.

**Build a drawer system that works best for you**

01. Start with a **Tool Drawer** for power tools and bags

02. Add **Parts Drawers** for hand tools and components

03. Finish with a **Top Tray** and crates or a **Worktop** surface





## Our 6 Step Process

| | | |
|---|---|---|
| Start with **Interior Finishing** 01 | Add a **Safety Partition** 02 | Choose your **Shelving Package** 03 |
| Add time-saving **Interior Accessories** 04 | Select your **Roof Equipment** 05 | Finish with **Exterior Accessories** 06 |



# Side-Door Drawer Systems

advantage OUTFITTERS



### Tool Drawer

- Aluminum
- Weight capacity: 320 lbs
- Includes 3 large dividers
- Gray powder-coated drawer face
- 17”W x 45”L x 19.5”H
- Lockable



| Description | Part# |
|---|---|
| Tool Drawer | DR10 |

### Parts Drawer

- Aluminum
- Weight capacity: 150 lbs
- Drawer has paddle latch
- Gray powder-coated drawer face
- 12.5”W x 45”L x 7.5”H
- Lockable



| Description | Part# |
|---|---|
| Parts Drawer | DR11 |





### Tool Drawer Top Tray

- Turn your drawer top into additional organization
- 16”W x 45”L x 4”H

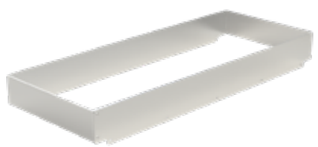

| Description | Part# |
|---|---|
| Top Tray for Tool Drawer | TE10 |

### Parts Drawer Top Tray

- Turn your drawer top into additional organization
- 16”W x 45”L x 4”H

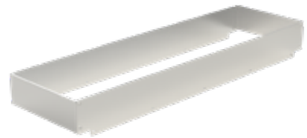

| Description | Part# |
|---|---|
| Top Tray for Parts Drawer | TE11 |

### Add a Worktop to Your Drawer System

- 18"D x 48"W hardwood butcher block top
- Mounts to top of drawer system



| Description | Part# |
|---|---|
| Drawer System Worktop | 176XWT |

# Parts Keepers

## Maximize your Productivity!

Bring all of your small parts in one trip





## Incorporate time saving Parts Keepers into your upfit:

1) Add single Parts Keeper units onto your shelves

2) Mount a Parts Keeper cabinet at your side door for easy access








### Parts Keeper Case

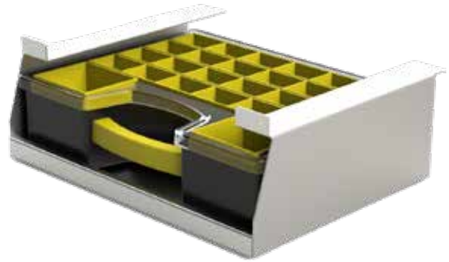

| Description | Part# |
|---|---|
| Parts Keeper Case | PK-1 |

**Be Efficient!**

Saving just 5 minutes per day will gain you 21 hours per year!

### 4 Pc. Parts Keeper Cabinet

- 1 Shelf
- Aluminum
- 17”W x 13.5”D x 24”H



| Description | Part# |
|---|---|
| 4 Pc. Parts Keeper | PK-4-1 |

### 5 Pc. Parts Keeper Cabinet

- 2 Shelves
- Aluminum
- 17”W x 13.5”D x 45”H



| Description | Part# |
|---|---|
| 5 Pc. Parts Keeper | PK-5-2 |

### 8 Pc. Parts Keeper Cabinet

- 1 Shelf
- Aluminum
- 17”W x 13.5”D x 45”H

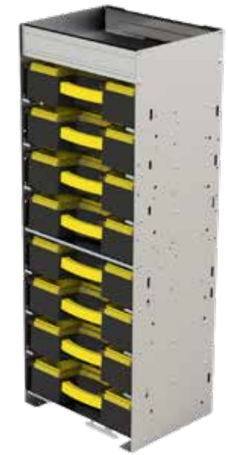

| Description | Part# |
|---|---|
| 8 Pc. Parts Keeper | PK-8-1 |

# Drawer Cabinets

**2-Drawer & 3-Drawer Cabinets:**

- Latching drawers with ball bearing slides
- Includes key lock for security
- Cabinets can be individually mounted to shelves or stacked on floor
- 12.5"D x 18.5"W x 10.5"H

**9-Drawer Cabinet:**

- Rattle-free plastic drawers with dividers
- Includes built-in drawer catch
- 12.5"D x 17"W x 12"H

Contractor Approved

**The drawers are super smooth and I couldn't be happier with them. High quality item.”**

**Leslie N.**

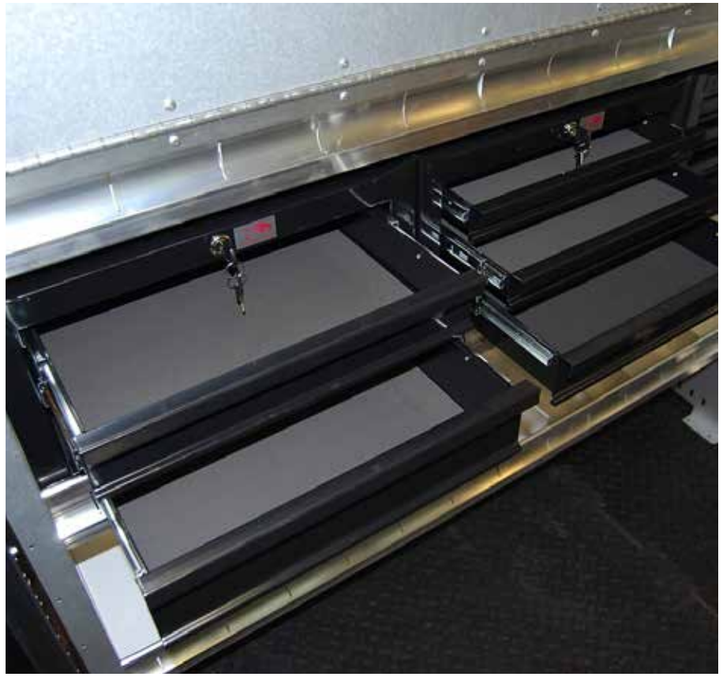

## 2-Drawer Cabinet



| Description | Part# |
|---|---|
| 2-Drawer Cabinet | 876XX2DC |

## 3-Drawer Cabinet



| Description | Part# |
|---|---|
| 3-Drawer Cabinet | 876XX3DC |

## 9-Drawer Cabinet

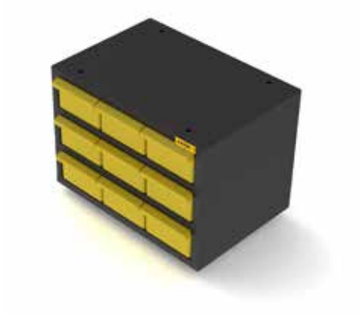

| Description | Part# |
|---|---|
| 9-Drawer Cabinet | 876XX9DC |



# Shelving Accessories



## Locking Door



| Description | Part# |
|---|---|
| 45”W x 10”H Locking Door (5 hole spacing for 48”W shelving unit) | SD1045 |
| 45”W x 11.5”H Locking Door (6 hole spacing for 48”W shelving unit) | SD1145* |
| 45”W x 13”H Locking Door (7 hole spacing for 48”W shelving unit) | SD1345 |

*Default size/shelf spacing

## Dividers (Pack of 5)

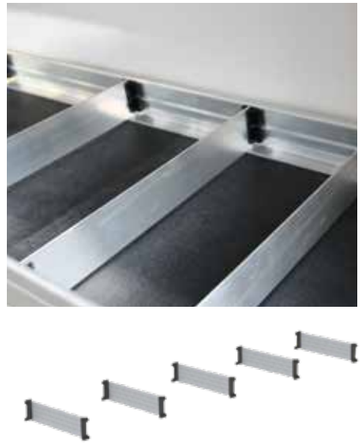

| Description | Part# |
|---|---|
| 11” Aluminum Shelf Dividers | CDS-11 |
| 12” Aluminum Shelf Dividers | CDS-12 |
| 14” Aluminum Shelf Dividers | CDS-14 |

## Bins




| Description | Part# |
|---|---|
| 11”D Plastic Bin | PBS-11 |
| 12”D Plastic Bin | PBS-12 |
| 14”D Plastic Bin | PBS-14 |

## Moveable Hooks

- Use two large hooks to hang ladder from shelving
- Clips to shelving lip



| Description | Part# |
|---|---|
| Small Ladder Hook | AC74 |
| Large Ladder Hook | AC73 |

## Swivel Hook

- Powder-coated blue finish



| Description | Part# |
|---|---|
| Swivel Hook | AC72 |

## Fixed Hook



| Description | Part# |
|---|---|
| Fixed Hook (3” opening) | AC70 |
| Large Fixed Hook (4" opening) | AC71 |

# Cab Accessories

## Cab Organizer Box



| Description | Part# |
|---|---|
| Locking Aluminum Cab Box Organizer | CL10 |

## First-Aid Kit




| Description | Part# |
|---|---|
| First-Aid Kit With Holder | 864XXFA |

## Hard Hat Holder



| Description | Part# |
|---|---|
| Hard Hat Holder | 876XXHH |

## Paper Holders





| Description | Part# |
|---|---|
| Aluminum 3-Slot Paper Holder | AC10 |
| Aluminum 5-Slot Paper Holder | AC14 |

## Triangle Kit



| Description | Part# |
|---|---|
| Triangle Kit | 876XXTK |

## Grab Handle

- High grip surface
- Increase safety and efficiency



| Description | Part# |
|---|---|
| Grab Handle | 876XXGH |



# Bottle Holders

## Small Bottle Holder

- For MC tanks



| Description | Part# |
|---|---|
| Small Bottle Holder | RS86 |

## Large Bottle Holder

- For B tanks and nitrogen tanks



| Description | Part# |
|---|---|
| Large Bottle Holder | RS88 |

## Refrigerant Rack Two Level

- For refrigerant tanks
- Keeps tanks vertical



| Description | Part# |
|---|---|
| Two Level Adjustable Bottle Holder | RS10 |

## Refrigerant Rack Three Level

- For 30lb and 50lb refrigerant tanks
- Includes shelf top of unit

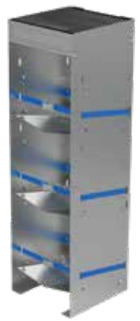

| Description | Part# |
|---|---|
| Large Aluminum 3 Tier Refrigerant Rack | RS-3L-1 |

## Refrigerant Rack Four Level

- For 30lb refrigerant tanks



| Description | Part# |
|---|---|
| Small Aluminum 4 Tier Refrigerant Rack | RS-4S |



# Side Dropdown Ladder Rack

## EZGlide2 Rack

Single Side Drop Down



- White powder coated aluminum construction
- Dual hydraulic struts allow for easy & effortless operation
- Conduit carrier sold separately

| Description | Part# |
|---|---|
| EZGlide2 Single Side Drop Down Rack | 387G1SR |
| EZGlide2 Double Side Drop Down Rack | 387G1DR |
| EZGlide2 Double Side Drop Down Rack with 3rd crossbar | 387G1DR3 |

## ErgoRack



- Aluminum and steel construction
- Removable rotation bar included
- Single side rack holds 1 extension ladder
- Double side rack holds 2 extension ladders
- Maximum extension ladder is 36’
- Add optional third crossbar to hold stepladders, fits 6-10’ foot stepladders only





| Description | Single Side Part# | Double Side Part# |
|---|---|---|
| ErgoRack for GM Van | 374GXSR | 374GXDR |



# Clamp Down Rack



## Quick Clamp Rack



Dual Side

- White powder coated aluminum construction maximizes roof carrying capacity
- Stainless steel hardware stands tough against time and weather
- Dual gas spring-assisted clamps on street & curb side of van rack
- Curved cross members reduce the height to load & unload the ladder rack
- Easily add a padlock for increased security
- Option to add a 3rd crossbar (#233-3-01)

| Description | Part# |
|---|---|
| Quick Clamp Rack Dual Side, Gutter Mount | 234-3-01 |

## Our 6 Step Process

| | | |
|---|---|---|
| Start with **Interior Finishing** 01 | Add a **Safety Partition** 02 | Choose your **Shelving Package** 03 |
| Add time-saving **Interior Accessories** 04 | Select your **Roof Equipment** 05 | Finish with **Exterior Accessories** 06 |

# Cargo Racks

## Cargo Racks

- Rust-free aluminum construction
- Includes ladder stops & straps





*optional rear roller bar

| Description | Part# |
|---|---|
| 2 Bar Rack | 395GX2B |
| 3 Bar Rack | 395GX3B |

## Rear Roller

- Add to any 2 or 3 bar rack
- Aids in loading ladders & material
- Protect your vehicle & brake light from damage

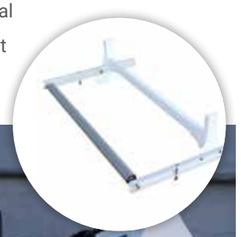



| Description | Part# |
|---|---|
| Rear Roller | 395GXRR |

## Ratchet Tie-Downs

- Recommended two per side
- Safely secure any type of load





| Model | Part# |
|---|---|
| Set of 2 for Cargo Racks | 795XXRTH1S |



# Ladder Rack Accessories



## Access Ladders

- Heavy duty extruded aluminum
- Contoured to fit Express/Savana
- Clamp on design eliminates holes in vehicle

| Description | Part# |
|---|---|
| Access Ladder | 774GXAL |





## Conduit Carrier

- 5" square rigid one piece design
- White powder-coated aluminum with black end caps
- Inside length of 10' 1"
- Lockable
- Add to any ladder rack



| Description | Part# |
|---|---|
| Conduit Carrier | 774XXCT |

# Running Boards / Hitches

## Grip Step Running Boards

- 7” wide stepping surface
- Black powder coat aluminum
- Open tread design for maximum grip
- 98” passenger’s board and 36” drivers board





| Description | Part# |
|---|---|
| Running Boards (Driver’s side and passenger’s side set) | 760GXRB |

## Tow Hitches

- Class III (600 lb tongue weight, 6000 lb trailer weight)
- 4-way flat & 7-way wiring systems



Duplex 4-Way Flat & 7-Way Wiring



Digital Brake Controller



| Description | Part# |
|---|---|
| Hitch – Class III Hitch for All Models | 706GXTH |
| 4-Way Flat Wiring Kit | 506GX4TC |
| Duplex 7-way/4-way Wiring Kit* | 506GX7TC |
| Digital Brake Controller | 506XXTBC |

* WARNING: Requires a Digital Brake Controller to enable trailer brakes.



# Security



## SecuriLock Double Slamlock

- Hardened weather-proof steel body
- Automatically locks when doors are shut
- High security key prevents duplication





| Description | Part# |
|---|---|
| SecuriLock Double Slamlock (set of 2) | 654XXSL |

## Slick Locks

- High security hasps use factory mounting points
- Solid steel “puck” style locks included
- Custom fit for drill-free installation





| Description | Part# |
|---|---|
| Set of 2 Slick Locks for Vans with Sliding Side Doors | 788GXSLH |
| Set of 2 Slick Locks for Vans with Swing Side Doors | 788GXSLS |

## Our 6 Step Process

| | | |
|---|---|---|
| Start with **Interior Finishing** 01 | Add a **Safety Partition** 02 | Choose your **Shelving Package** 03 |
| Add time-saving **Interior Accessories** 04 | Select your **Roof Equipment** 05 | Finish with **Exterior Accessories** 06 |

# Climate Control

**NOTE.**
Products shown on this page are not available for onsite install

## HVAC Tie-In System

- Engine-driven system designed for generally moderate climates
- Achieve an indoor temperature approximate 12-15 degrees below the maximum outside temperature
- Adds a high-capacity evaporator in the cargo area
- Ties in to vehicle's existing OEM compressor and condenser
- Connects into vehicle's existing coolant lines for heat function

**Application Example:**
- Art Transport
- Mobile Showrooms



| Description | Part# |
|---|---|
| Tie-In HVAC System | 997XXTI |

## HVAC Extreme Climate System

- Engine-driven system designed for the most demanding HVAC requirements
- Achieve an indoor temperature of up to 30 degrees below the maximum outdoor temperature
- Adds a high-capacity evaporator in the cargo area
- Adds a powerful auxiliary compressor in the engine compartment
- Adds an additional condenser (either rooftop mount or underbody options)
- Connects into vehicle's existing coolant lines for heat function

**Application Example:**
- Animal Transport
- Mobile Labs



| Description | Part# |
|---|---|
| HVAC Extreme Climate System | Call for details |

## Fuel-fired Heaters

- High-performance combustion heater for safe, reliable heat
- Powered through the vehicles existing fuel tank
- Gas and diesel options
- Pair with our auxiliary battery/ charging system for vehicle-off operation
- Compact design mounts almost anywhere on the floor
- Uses as little as 1 gallon of fuel per 22 hour period
- Up to 7,000 BTU/h heat output

**Application Example:**
- Carpet Cleaners
- Mobile Pressure-Washers



| Description | Part# |
|---|---|
| Fuel-Fired Heater, gas engines, with Standard Controller | 997XXGSC |
| Fuel-Fired Heater, gas engines, with Programmable Controller | 997XXPSC |
| Fuel-Fired Heater, diesel engines, with Standard Controller | 997XXDSC |
| Fuel-Fired Heater, diesel engines, with Programmable Controller | 997XXPSC |



# Inverters

advantage OUTFITTERS

**NOTE.**
Products shown on this page are not available for onsite install

## Compact Power Inverters

- Pure Sine Wave – safe for electronics and lithium-ion chargers
- 1,200W - 2,000W options
- Perfect for occasional and light/medium loads
- Runs most basic hand tools, chargers, and small appliances
- Single GFCI outlet built into unit



Remote Switch



2,000W



1,200W

| Description | Part# |
|---|---|
| 1,200W Pure Sine Wave Inverter with cabling & fuse | 596XX1.2PI |
| Bluetooth Adaptor for 1,200W Inverter | 596XXBD |
| Remote Switch for 1,200W Inverter | 596XXRS |
| 2,000W Pure Sine Wave Inverter with cabling & fuse | 503XX2PI-HF |
| Remote Switch for 2,000W Inverter | 503XXRS |

## Heavy Duty Power Inverter/ Charger Systems

- Designed for daily use in industrial applications
- 3,000W - 10,000W options
- Perfect for utilities, mobile workstations, and high-surge loads
- Hardwire only - configure with multiple outlets and shore power charging
- Bluetooth-enabled plus remote monitoring options





3,000W

*110V outlets and shore power inlet not included – call to configure

| Description | Part# |
|---|---|
| 3000W Pure Sine Wave Inverter/Charger* with cabling & fuse | 596XX3PI |
| 5000W Pure Sine Wave Inverter/Charger* with cabling & fuse | 596XX5PI |
| Digital Remote Control Panel | 596XXRC |

## Auxiliary Batteries

- Enables inverter operation with vehicle off
- Provides reserve power for high-surge loads
- 100AH-460AH battery bank options
- Isolated from OEM battery for reliable starts
- Automatically charged via vehicle alternator or optional shore power



*Optional Battery Monitor





100 AH Battery

| Description | Part# |
|---|---|
| 100AH AGM Deep-Cycle Battery with Isolator and Battery Box | 503XX1AB-B |
| 200AH AGM Deep-Cycle Battery with Isolator and Battery Box | 503XX2AB-B |
| Battery Monitor – Bluetooth enabled | 596XXBMS |

# Liftgates

## Cantilever Series

- Most popular model
- 1300 lb capacity
- Folds to allow rear door access while stowed
- 53”W x 40”L load area
- Built in cart stops

| Description | Part# |
|---|---|
| Cantilever Liftgate for Express/Savana Vans | 989GXCS* |

* Available on special order only



**NOTE.**
Products shown on this page are not available for onsite install

## V2 Series

- 1100 lb capacity
- Stores inside van
- 47”W x 34”L load area
- Built in cart stops





| Description | Part# |
|---|---|
| V2 Liftgate for Express/Savana Vans | 989GXV2* |

* Available on special order only

## Don’t see what you’re looking for?

Contact us to design a custom build, we love a challenge!



### Mobile **Laboratory**

**Challenge:** A manufacturer was looking to perform climate controlled hydraulic tool calibration onsite for their customers.



### Incident **Command**

**Challenge:** A regional OEM was looking to manage agency communications and radio distribution at major emergency scenes.



### Mobile **Showroom**

**Challenge:** A luxury stone & tile distributor was looking to grow their business by bringing their showroom to their clients.





## Regular 135" WB

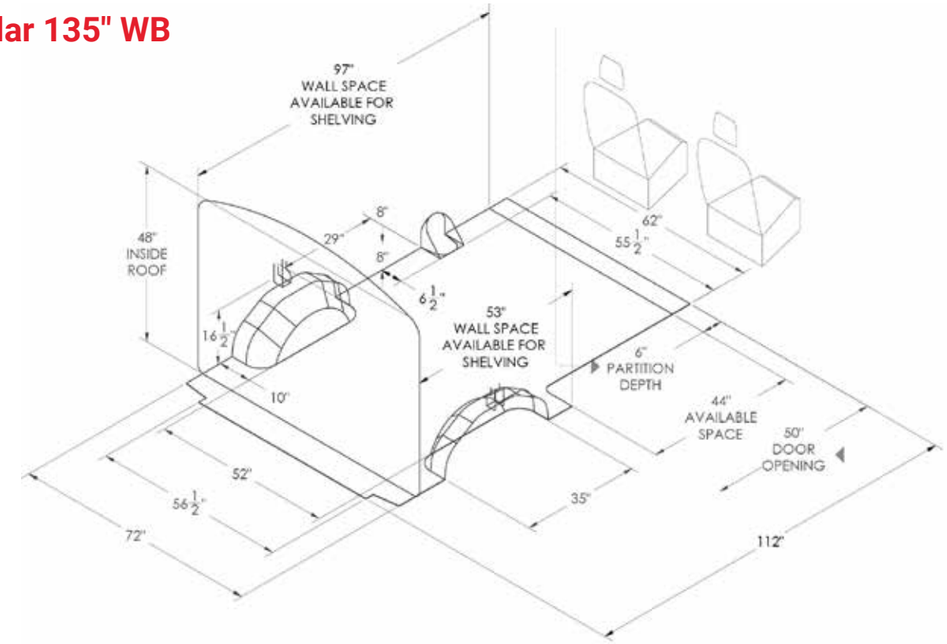


## Extended 155" WB

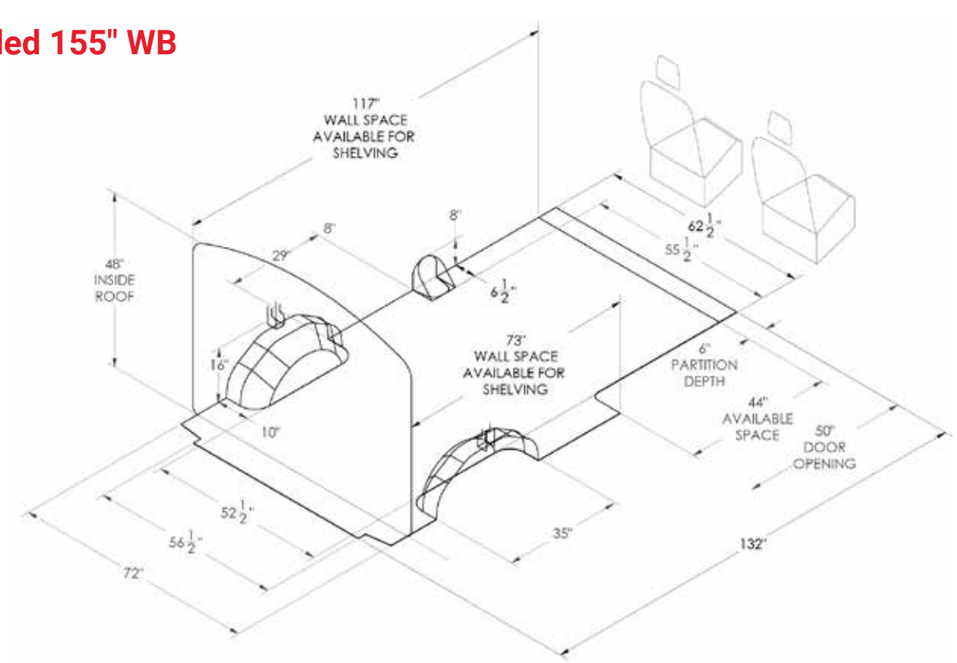

# 7500+

## Vans Upfitted Per Year







## Your Express & Savana Customizing Starts Here.

Let Advantage Outfitters
make your van work-ready!

**95%** Stock Orders Completed in 48 Hours or Less

LIMITED LIFETIME WARRANTY

*Serving the tri-state region*

New York · New Jersey · Connecticut · Pennsylvania

Contact Your Savanna/Express Dealer

**WEST**
255 West Street
South Hackensack,
NJ 07606

**EAST**
107 E. Hawthorne Ave.
Valley Stream,
NY 11580

sales@advantageoutfitters.com

866.925.4844

advantageoutfitters.com